FD-04-0A3

管理番号 MMP21-B64-X 2

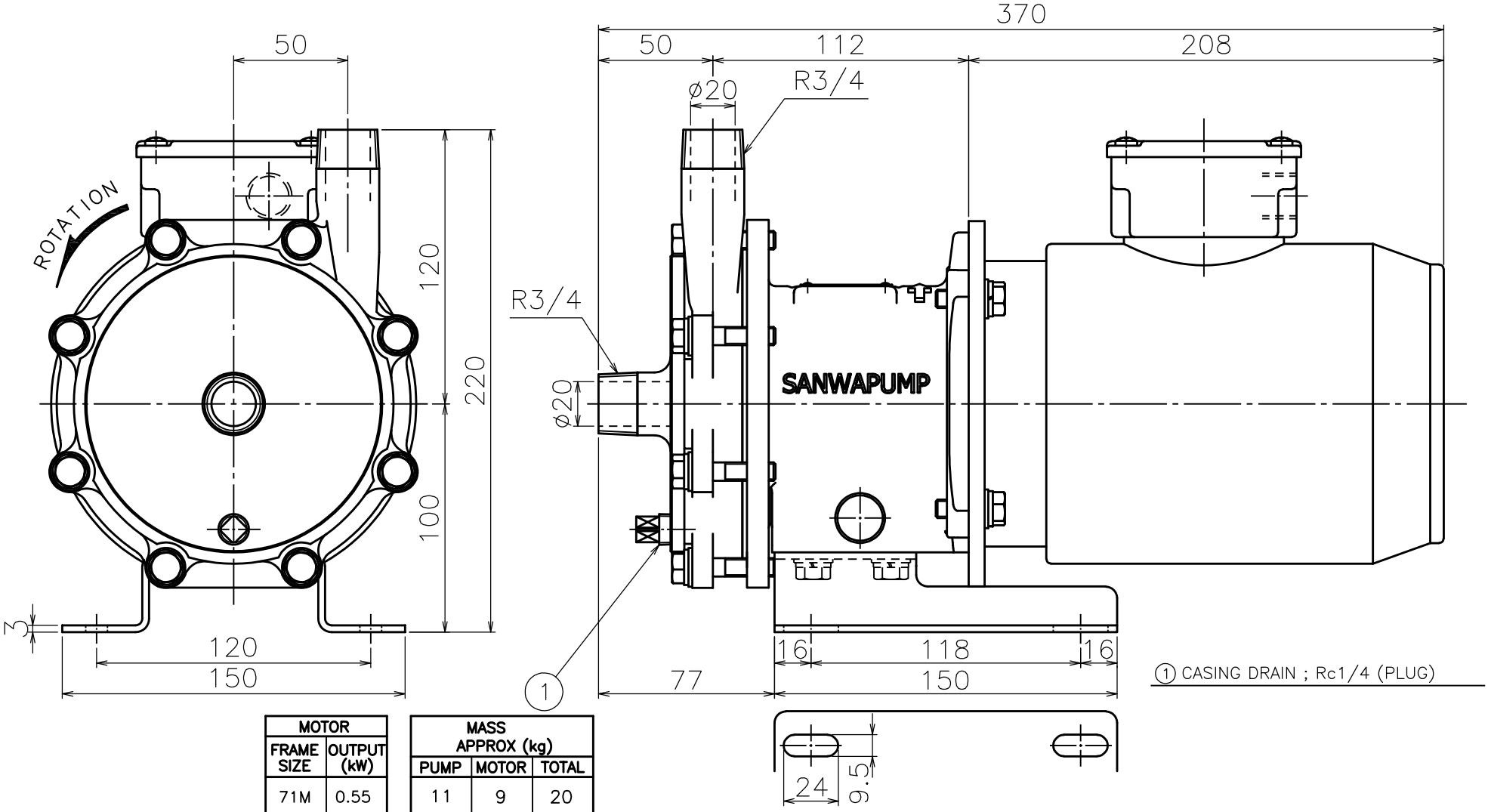

MOTOR	
FRAME SIZE	OUTPUT (kW)
71M	0.55

MASS APPROX (kg)		
PUMP	MOTOR	TOTAL
11	9	20

REV.	2023.09.06 A.E		
APP'D	T.Shimayoshi	CH.	M.Murakami
CHIEF		DWN.	M.Murakami
CH'D	M.Murakami	DATE	2020.03.30

PUMP CODE
MMP21-B66
MAGNETIC DRIVE
CENTRIFUGAL PUMP
OUTLINE DIMENSIONS

3rd ANGLE PROJECTION | SCALE 1/2

WORK No.

QTY.

DWG.No. MMP21-B66-X

REV. 1

SANWA HYDROTECH CORP.

承 資品1 機組1 控計

FD-04-0A3

管理番号 MMP21-B66-0 1

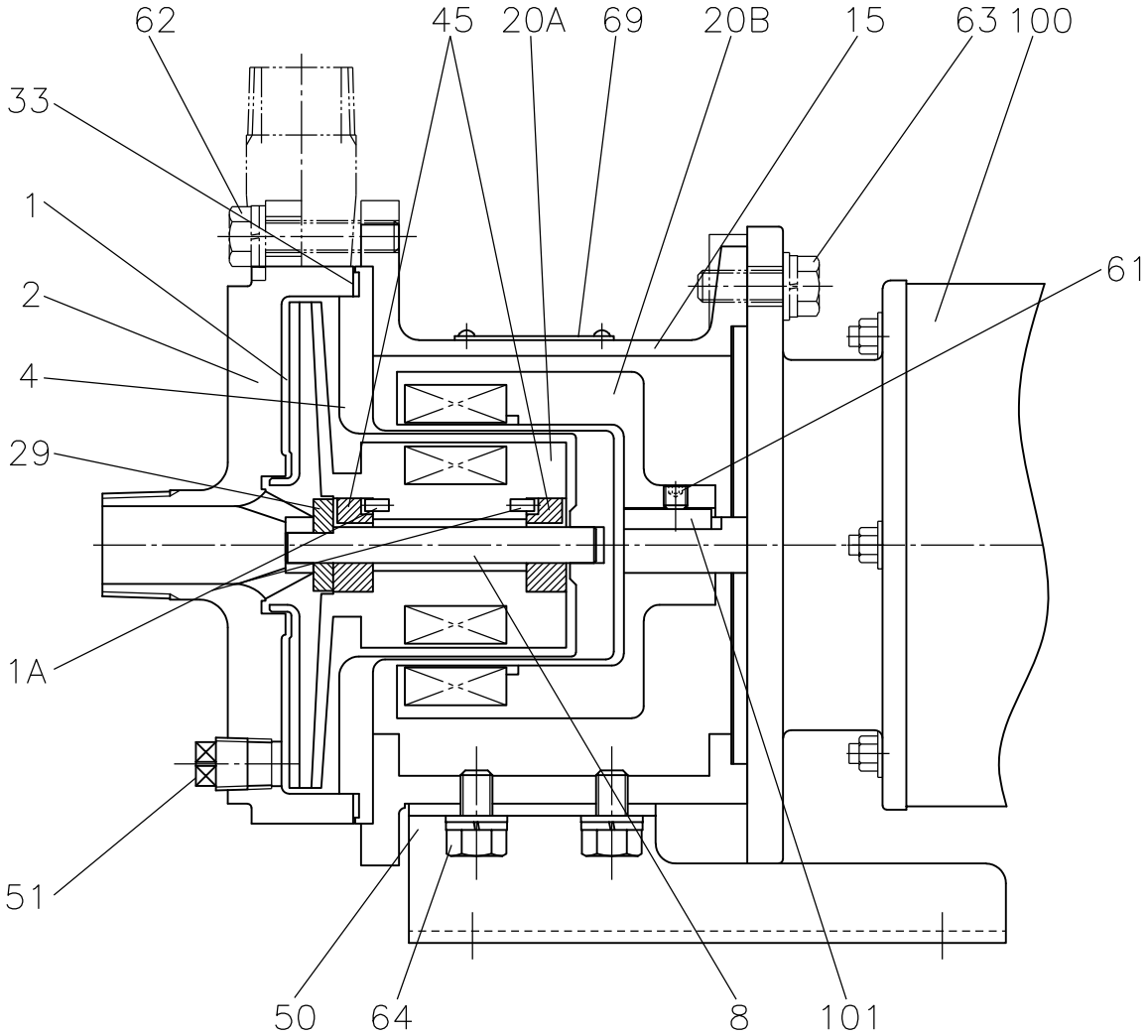

MARK	NAME OF PART	MAT'L	USE No.REQ'D	SPARE	WT.	REMARK.
101	COUPLING KEY	S45C	1			
100	MOTOR	–	1			
69	NAME PLATE	SUS304	1			
64	HEXAGON HEAD BOLT	SUS304	4S			with WASHER
63	HEXAGON HEAD BOLT	SUS304	4S			with WASHER
62	HEXAGON HEAD BOLT	SUS304	8S			with WASHER
61	SET SCREW	SCM435	1			
51	PLUG	SUS316	1			
50	BASE	SUS304	1			
45	BUSHING	SiC-D	2			
33	GASKET	PTFE	1			φ125×φ136×1.5t
29	THRUST RING	SiC	1			
	MAGNET	RARE EARTH	1S			
20B	MAGNET COUPLING(M)	FCD	1			R25x6N
15	FRAME ADAPTER	FC200	1			
8	SHAFT	SiC	1			
4	REAR CASING	SUS316	1			
2	CASING	SCS14	1			
	MAGNET	RARE EARTH	1S			
20A	MAGNET COUPLING(P)	SUS316	1			R25x6N
1A	PIN	SUS316	2			
1	IMPELLER	SCS14	1			

NAME OF PART	MAT'L	QTY.
ACCESSORIES		

REV.
△1 2021.08.10 A.E

APP'D	T.Shimayoshi	CH.	A.Endo
CHIEF	M.Murakami	DWN.	M.Murakami
CH'D	S.Okamoto	DATE	2020.03.31

PUMP CODE
MMP21-B66
MAGNETIC DRIVE CENTRIFUGAL PUMP

SECTIONAL DRAWING

3rd ANGLE PROJECTION | SCALE

WORK No.

QTY.

DWG.No. MMP21-B66-0 REV. 1

SANWA HYDROTECH CORP.

承 資 品 1 機 組 1 控 計

PUMP DATA SHEET

WORK No.				
CUSTOMER		DATE		2020/4/1
USER		AUTH. BY	CHKD BY	MADE BY
EQUIP'T NAME		T.Shimayoshi	M.M	M.Murakami
ORDER No.		REV. DATE	LINE No.	BY
JOB No.				
ITEM(PUMP)No.				
PUMP NAME				
QUANTITY				

OPERATING CONDITIONS

LIQUID				
SLURRY				
	(wt%)			(mm)
PH				
PUMPING TEMP.		(-20～130)		(℃)
SPEC. GRAVITY	@P.T.	1		
VAPOUR PRESS.	@P.T.			
VISCOSITY	@P.T.	1		(mPa・s)
CAPACITY	1.8	(m3/hr)	30	(l/min)
DISCH. PRESS.				(MPaG)
SUCT. PRESS.				(MPaG)
DIFF. PRESS.				(MPa)
TOTAL HEAD		24		(m)
NPSH AVAIL.				(m)
CASE DES. TEMP.	130	(℃)	PRESS. 0.6	(MPaG)
INSTALLATION	☐ INDOOR	☐ OUTDOOR		

CONSTRUCTION

PUMP CODE	MMP21-B66		
MAGNET TYPE	R25x6N		
BEARING	RADIAL : -	THRUST : -	
AUXILIARY PIPING	-		
NOZZLE	SIZE	RATING	FACING
SUCTION	3/4″	R	-
DISCHARGE	3/4″	R	-
IMPELLER DIA. DES.	φ115		(mm)
ROTATION VIEWED FROM CPLG END	■CW	□CCW	

PERFORMANCE

SPEED	3520			(rpm)
NPSH REQ'D(WATER)	-			(m)
DES. EFF.	27			(%)
DES. BHP	0.44			(kW)
MIN. CONTINUOUS FLOW	0.24	(m3/hr)	4	(l/min)

MOTOR

TYPE	全閉外扇 屋外	FORM	ﾌﾗﾝｼﾞ形	
SPEED	3600 (SYN)			(rpm)
VOLTS/CYCLE	200	(V)	60	(Hz)
RATED OUTPUT/POLES	0.55	(kW)	2	(P)
FRAME	71	MFR.	BROOK	

MATERIALS

CASING	SCS14
IMPELLER	SUS316
BUSHING,THRUST RING	SiC-D,SiC
SHAFT (HF)	SiC (-)
GASKET	PTFE
O RING	---

PUMP PAINTING

COLOR	BODY: 2.5PB4/10	COVER:	---

REMARKS

SANWA HYDROTECH CORP.

DWG.No.	MMP21-B66-D

<試験成績表>

CODE : MMP21-B64/B66
PUMP TYPE : MMP
PUMP SIZE : 21

発行日:2019.05.13
Rev.1 : 2020.04.01
Rev.2 : 2022.10.06
Rev.3 : 2023.10.16

規格要目	指定揚液(温度[℃]、比重、粘度)	吐出し量(ℓ/min)	全揚程(m)	回転速度(min-1)	原動機出力(kW)	NPSHAv/Req(m)
	常温/1/1[mPa·s]	30	24	3520	0.550	ー/ー

計測項目		1	2	3	4	5	6	7	8
回転速度(min-1)		3523	3505	3496	3478	3460			
水温(℃)		24.7	24.7	24.7	24.7	24.7			
吐出し量	測定器の読み(ℓ/min)	0.0	15.0	30.0	45.0	60.0			
	吐出し量(ℓ/min)	0.0	15.0	30.0	45.0	60.0			
揚程	吐出しヘッド(m)	27.8	26.7	25.5	23.5	20.7			
	吸込ヘッド(m)	0.38	0.36	0.30	0.17	0.02			
	測点高差(m)	0.00	0.00	0.00	0.00	0.00			
	速度ヘッド(m)	0.000	0.000	0.000	0.000	0.000			
	全揚程(m)	27.4	26.3	25.2	23.3	20.7			
理論動力(kW)		0.000	0.064	0.123	0.171	0.202			
周波数(Hz)		60.0	60.0	60.0	60.0	60.0			
電動機	電圧(V)	201.7	201.4	201.2	201.3	200.8			
	電流(A)	1.610	1.780	1.970	2.140	2.320			
	入力(kW)	0.396	0.473	0.548	0.618	0.690			
	効率(%)	76.1	77.3	77.7	77.7	77.6			
	出力(kW)	0.301	0.366	0.426	0.480	0.536			
軸動力(kW) (比重=1)		0.301	0.366	0.426	0.480	0.536			
ポンプ効率(%)		0.0	17.6	28.9	35.7	37.8			
回転換算	吐出し量(ℓ/min)								
	全揚程(m)								
	軸動力(kW)								
粘度換算	吐出し量(ℓ/min)								
	全揚程(m)								
	軸動力(kW)								
	ポンプ効率(%)								
	ﾏｸﾞﾈｯﾄﾎﾟﾝﾌﾟ効率(%)								

電動機要目

形式		WP-DA71SR-D-IE3
出力	(	0.55 kW)
周波数(Hz)	(	60 Hz)
電圧	(	200 V)
電流	(	2.5 A)
極数	(	2 P)
回転速度	(	3440min-1)
製造番号		-
製造業者名		BROOK
試験揚液		常温清水
吐出量測定方法		電磁流量計
室温	(	25 ℃)
連続運転時間	(	60 min)
軸受温度		
軸継手側	(	ー ℃)
反対側	(	ー ℃)
インペラー径	(	115.0 mm)
マグネット形式		R25x6N
キャンロス	(	0.050 kW)
備考		
試験者名		島田
製造業者名		三和ハイドロテック(株)

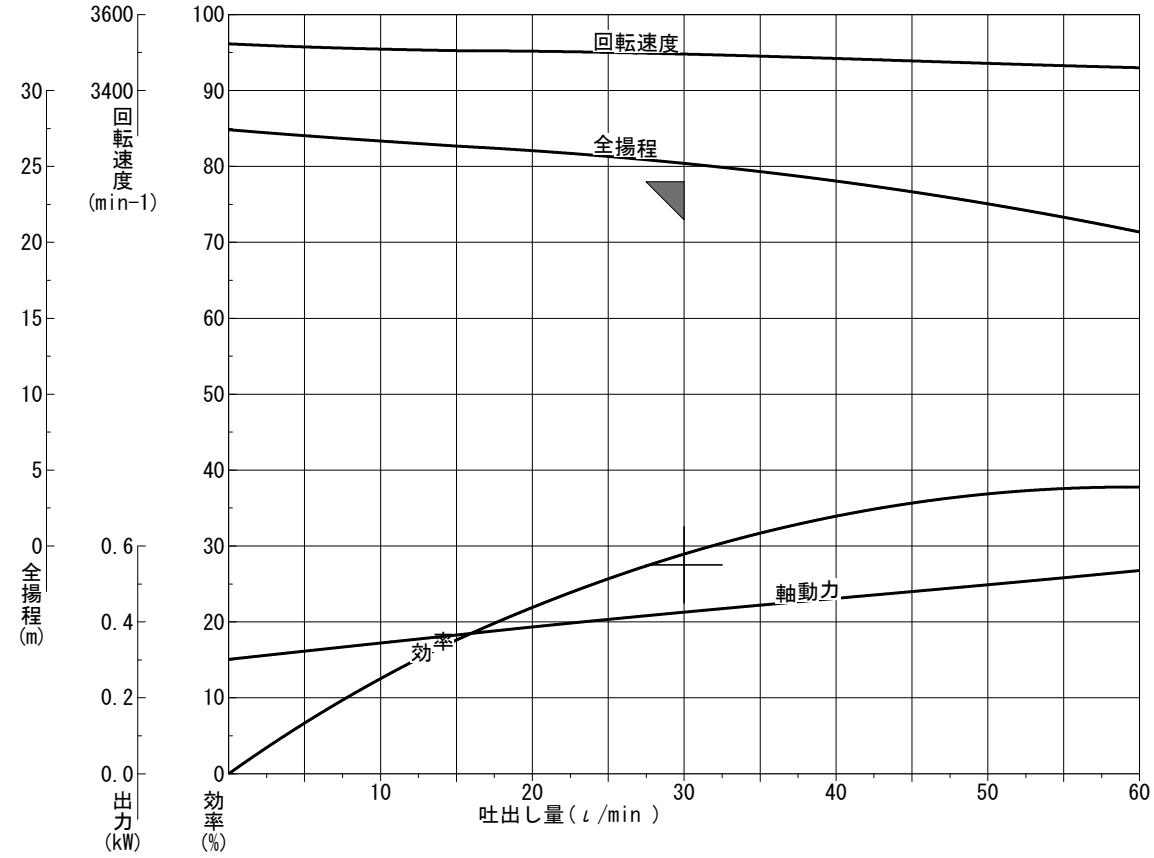

試験番号 01

SANWA HYDROTECH CORPORATION

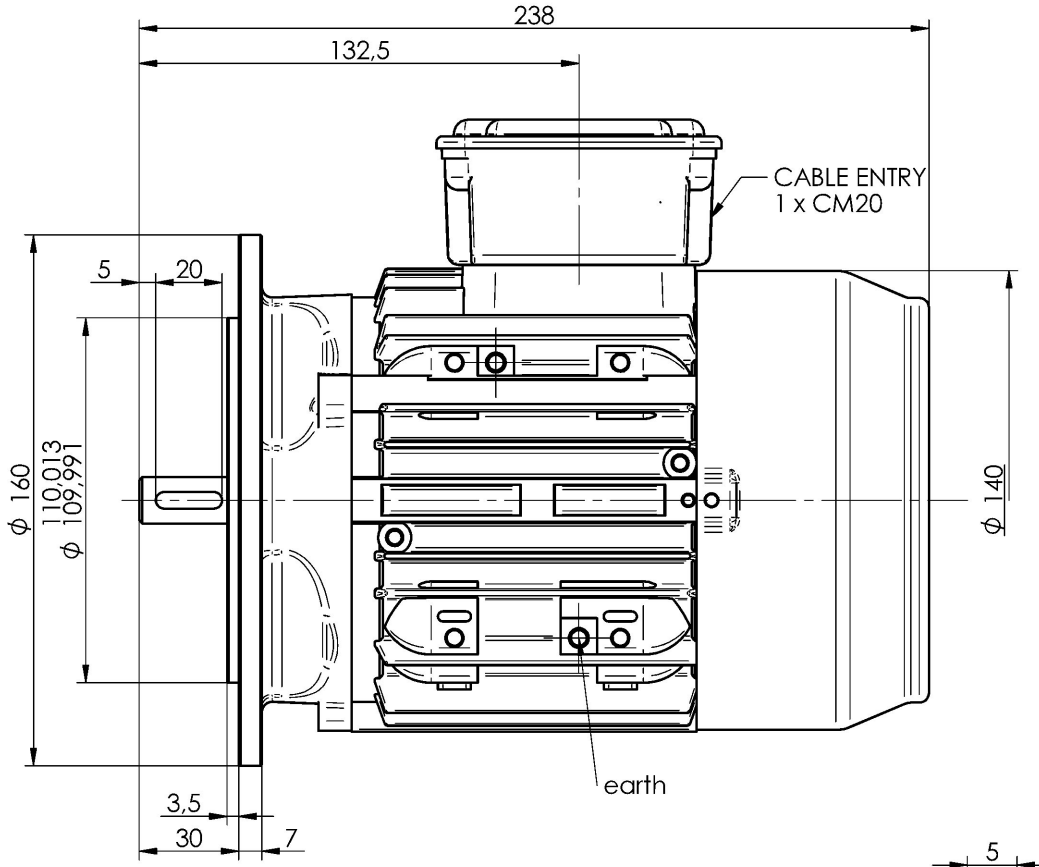

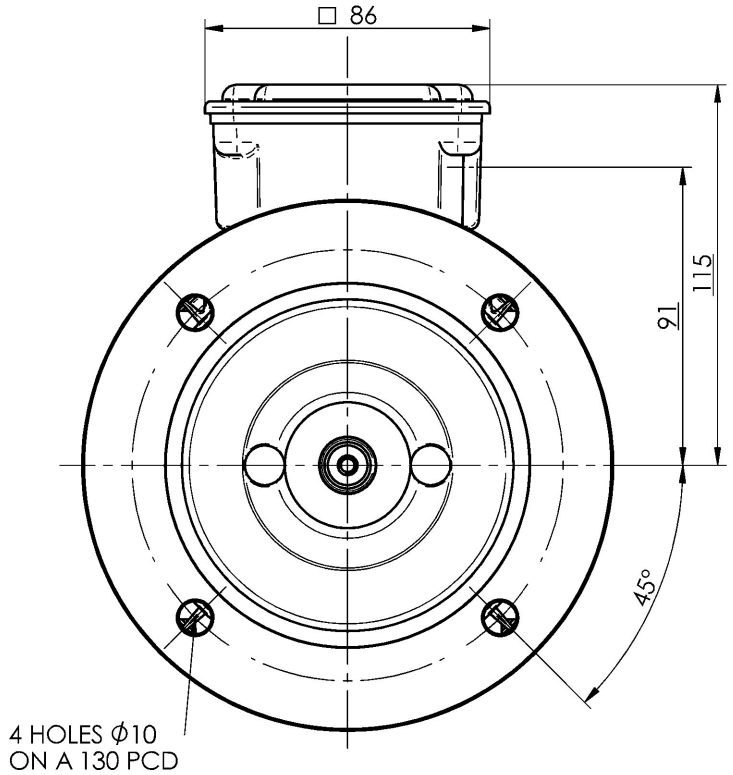

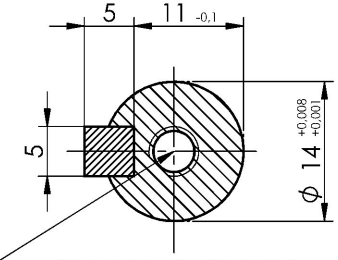

HOLE TAPPED
M5X12,5 DEEP
DIN 332D

SHAFT SECTION
1:2

TERMINAL BOX
CAN BE ARRANGED AT EITHER 9, 12 OR 3 O`CLOCK.
CAN BE ROTATED AT 90° INTERVALS
CONDUIT ENTRY POSITION SHOWN FOR ILLUSTRATION ONLY

ALL MOUNTING DIMENSIONS: ISO 2768-mK ACC TO EN 22768-1/2

ALL DIMENSIONS IN MILLIMETERS

FIRST ANGLE PROJECTION

BROOK CROMPTON
Keeping Industry Turning

Produced by ATB Tamel S.A. a company of ATB

SHEET SIZE A3	TITLE: OUTLINE DIMENSIONS OF METRIC STANDARD 3-PHASE MOTOR TOTALLY-ENCLOSED FAN-COOLED W SERIES ALUMINIUM 71S FRAME D-FLANGE MOUNTED		NAME	DATE	DRG. No.	W18GD0005T	
		DRAWN	KZ	12-11-2019	DRG. REF.	-	
		CHECKED	PGO	12-11-2019			
	SPECIAL REMARKS:	SCALE	1 : 1.5		REVISION:	0	DATE -

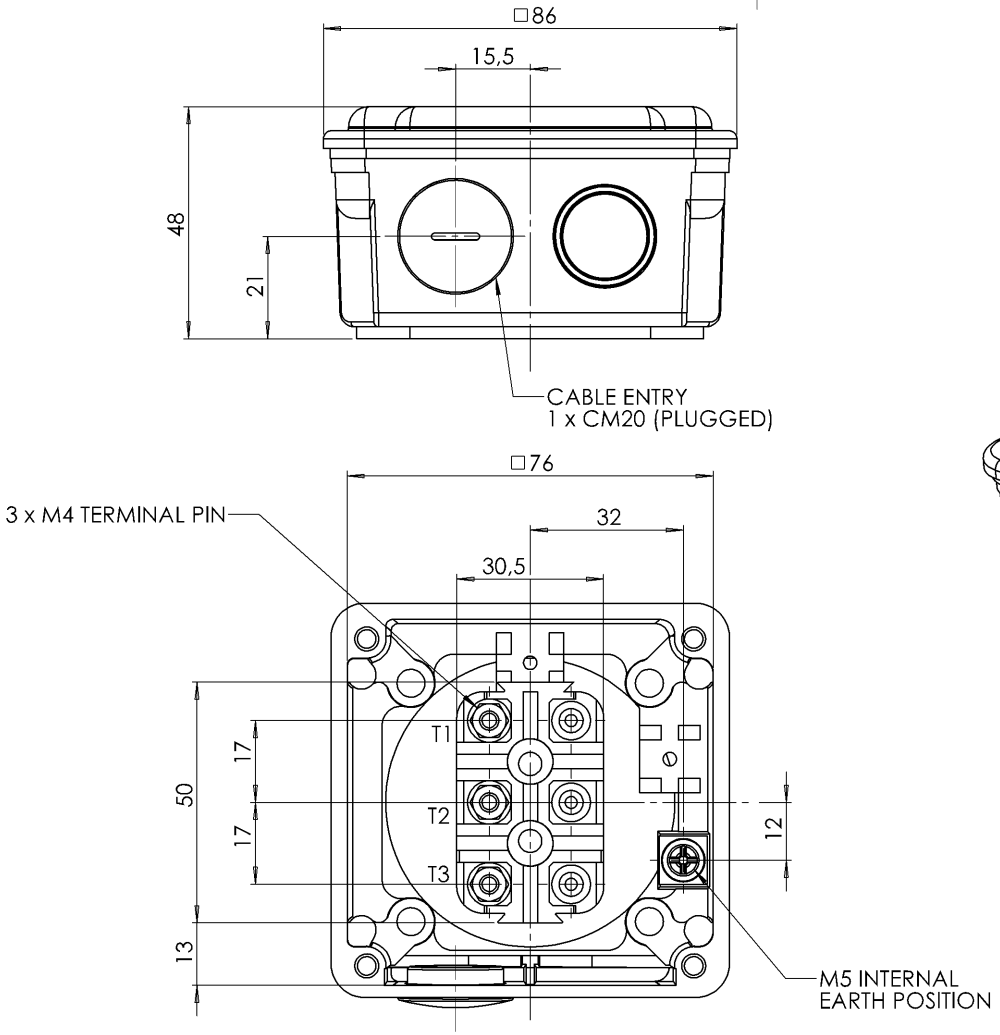

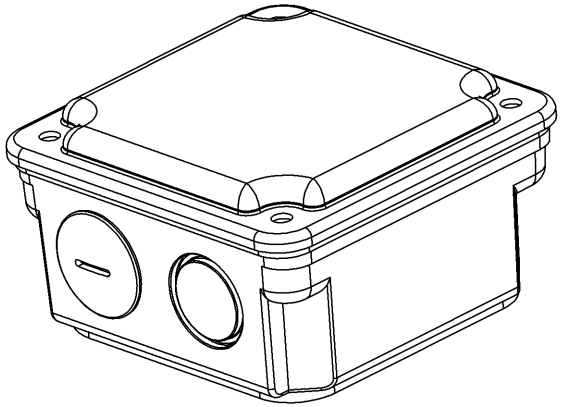

VIEW WITHOUT LID

ALL DIMENSION IN MILLIMETERS

FIRST ANGLE PROJECTION

BROOK CROMPTON

Produced by Tamel a company of NTB

SHEET SIZE	TITLE
A3	TERMINAL BOX FOR 071W000601T MOTOR.

	NAME	DATE
DRAWN	PGO	07.04.2022
CHECKED	KZ	07.04.2022
SCALE	1:1	

DRG. No.	TB071W000601T		
DRG. REF.			
REVISION:	1	DATE	07.04.2022